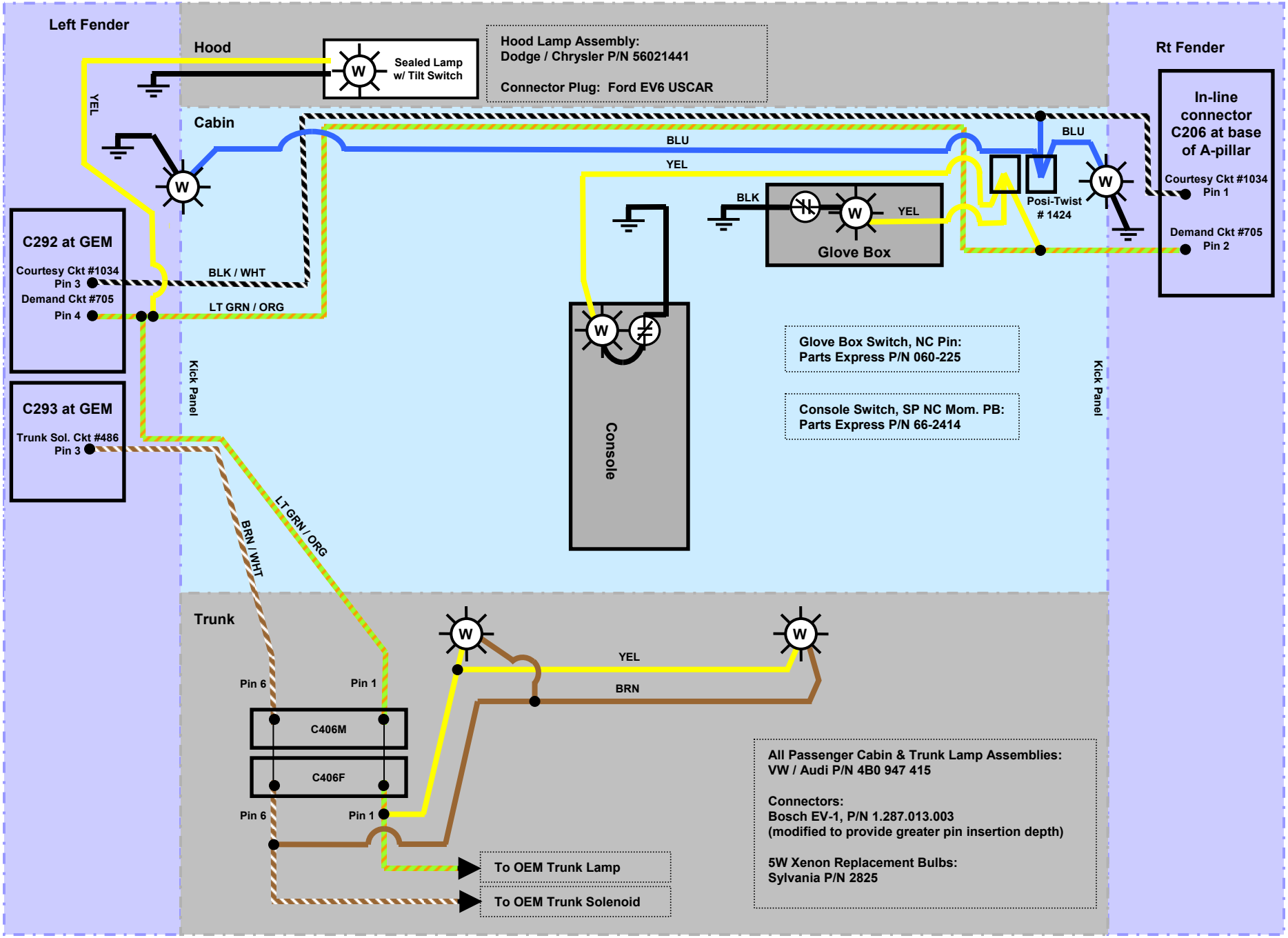Courtesy Lighting Circuits